Journal of Experimental Marine Biology and Ecology 398 (2011) 40–46

Contents lists available at ScienceDirect

Journal of Experimental Marine Biology and Ecology

journal homepage: www.elsevier.com/locate/jembe

Creating stocks of young colonies from brooding coral larvae, amenable to active reef restoration

B. Linden [a,b,*], B. Rinkevich [a]

[a] Israel Oceanographic and Limnological Research, National Institute of Oceanography, Tel-Shikmona, PO Box 8030, Haifa 31080, Israel
[b] Institute for Biodiversity and Ecosystem Dynamics (IBED), University of Amsterdam, PO Box 94766, 1090 GT, Amsterdam, The Netherlands

ARTICLE INFO

Article history:
Received 26 July 2010
Received in revised form 1 December 2010
Accepted 5 December 2010
Available online 14 January 2011

Keywords:
Brooder
Coral gardening
Coral reef restoration
Eilat
Planulae
Sexual recruits
Spat
Stylophora pistillata

ABSTRACT

Coral reefs are declining worldwide, even though traditional reef practices continuously underlie reef protection. This calls for exploration and integration of novel restoration techniques and tools, such as the "gardening" concept. The gardening approach, which has been successfully applied in various reef sites worldwide, is based on farming coral stocks in mid-water nurseries. To date, the farming of asexually produced coral material has chiefly been studied. Here, we test the performance of a novel spat-stocking tool for planulae of *Stylophora pistillata*, a brooding coral species. Two prototypes of a new settlement apparatus and one original apparatus made of Petri dishes lined with preconditioned transparency (Mailer's paper) disks had been stocked with >3730 planulae. After 96 h, only 95.3% of >2080 settlers were found on the Mailer paper provided. One-month-old survivors (80.8% of initial settlements) that were kept *ex situ* in a flow through seawater table were detached from the papers, "transglued" onto plastic pins, and transferred to mid-water coral nursery, where the trays were covered with fitted plastic nets (1 cm^2 mesh) to prevent predation and detachment. Four months later, more than 89% survivorship was documented, with colonies starting to form 3D structures. We estimate that 676 person-hours would be required to create 10,000 5-month-old genotypes of equal size to small branch fragments. This novel methodology allows farming of large quantities of colonies originating from sexually produced planulae and may enhance local populations' genetic variability within a short period. This method is inexpensive and easy to perform in remote places for incorporation in coral reef management practices.

© 2010 Elsevier B.V. All rights reserved.

1. Introduction

The Global Environmental Facility (GEF) has recently estimated that 19% of worldwide reef area has already been lost, 15% of the reefs are under serious threats of loss within the next 10–20 years, and 20% will be lost in 2–4 decades (Wilkinson, 2008). Peer-reviewed studies published in the last two decades have dealt at length with the various agents (i.e., climate change, pollution, ocean temperature and acidification, coral bleaching and disease) responsible for the wide-scale decline of coral reefs and the consequences of biodiversity loss (Hughes et al., 2003; Ayre and Hughes, 2004; Donner et al., 2005; Hoegh-Guldberg et al., 2007; Rinkevich, 2008; Riegl et al., 2009; Shaish et al., 2010). The establishment of Marine Protected Areas (MPAs), a "passive" management measure (Rinkevich, 2006, 2008), has increased rapidly over the past three decades, aiming to reduce reef degradation and assist natural recovery of degraded reefs. While MPAs currently cover 18.7% of the total global reef area (98,650 km^2, Mora et al., 2006), they have been inefficiently applied and many MPAs have often failed to meet their goals (Mora et al., 2006; Sale, 2008).

Integrating "active" restoration tools into the currently employed MPA management strategies may be an improved approach to alleviating rates of reef decline (Rinkevich, 2006, 2008). In most cases, it is unlikely that a system that has shifted away from the coral dominated phase will spontaneously revert back without involving active restoration acts (Rinkevich, 2008). Clearly, as ecosystems are naturally dynamic and subject to changes in time (Jackson and Hobbs, 2009), restoration should be applied or employed to reestablish the function and not necessarily focus on the conservation of one or two the species. Where possible, eco-engineering tools should be given the opportunity to restore ecological services and reef resilience and reconstruct the food webs that support ecosystem functions (Byers et al., 2006). This is the reason we use *Stylophora pistillata* from Eilat as a model system. This is a robust, fast growing, and dominant species in the northern Red Sea coral reefs (as compared to populations from other localities; Marshall and Baird, 2000; McClanahan et al., 2004). It can tolerate high temperatures and is a target species for large numbers of reef dwelling fish and invertebrates. These characteristics

* Corresponding author. Institute for Biodiversity and Ecosystem Dynamics (IBED), University of Amsterdam, PO Box 94766, 1090 GT, Amsterdam, The Netherlands. Tel.: +31 972 52 39 84 964.
E-mail address: Bart.linden@gmail.com (B. Linden).

0022-0981/$ – see front matter © 2010 Elsevier B.V. All rights reserved.
doi:10.1016/j.jembe.2010.12.002

make *S. pistillata* an excellent bioengineering candidate for restoring ecosystem functions and denuded coral reefs in Eilat.

The latest active restoration tool employed is based on the "gardening concept" (Epstein et al., 2001, 2003), mirroring the well-established scientific discipline of terrestrial reforestation in the form of a two-step protocol (Rinkevich, 2005, 2006; Edwards and Gomez, 2007). The first step entails rearing coral "seedlings" in underwater nurseries to transplantable size, and the second step involves transplanting nursery-reared colonies onto damaged reef areas. Most corals used in active reef restoration originated from asexual source material, coral branches, fragments and nubbins (Shafir and Rinkevich, 2008), taken from field growing colonies or stray coral fragments (Bowden-Kerby, 2001; Lindahl, 2003; Nagelkerken et al., 2000; Yap, 2004; Putchim et al., 2008; Guest et al., 2009; Shaish et al., 2008; Levy et al., 2010; Mbije et al., 2010; and literature therein). Notably fewer studies have explored the use of sexually generated coral material for reef restoration, by collecting eggs and sperm from broadcaster coral species, or planulae from brooders (Petersen et al., 2005a; Omori, 2005; Nozawa, 2008; Okamoto et al., 2008).

Clearly, restoring a coral reef via fragmentation may not provide the same genetic diversity that is acquired by planting sexually produced corals (Rinkevich, 2005), although maintenance of high levels of genetic diversity in coral populations is crucial in terms of resilience against disturbance (Van Oppen and Gates, 2006). Because coral planulae and spats have a much higher chance of survival *ex situ* than in the wild (Keough and Downes, 1982; Fabricius and Metzner, 2004), successful maintenance of coral spats requires the development of complex inland facilities (Petersen et al., 2005a,b; Okamoto et al., 2008), which are not always available near coral reefs. However, it was shown that planulae could easily be transported from collecting sites for several days with high survival rate. One study (Petersen et al., 2005a) recorded >90% survivors transported for 10 days in 10 μm filtered seawater and 15 or 50 ml tubes (with planulae concentrations ≤3.3 larvae ml^{-1}). It is possible, therefore, to collect larvae in remote areas, transport them, and settle them in inland facilities.

The use of coral larvae for reef restoration measures calls for the concurrent development of untraditional settling methodologies, using a substrate type that is attractive to coral larvae, recyclable, and replaceable. This constituted a major drawback in previous studies, in which spats settled permanently on first-available solid substrates (Okamoto et al., 2005; Petersen et al., 2005a; Nozawa, 2008; Omori and Iwao, 2009). These spats could not be spaced for individual growth and, due to intraspecific competition, had therefore reduced spat viability and growth rates.

Here, we introduce a new stocking method for coral spats, which allows the efficient production of numerous sexually produced coral colonies with the same attachment versatility as asexual fragments or nubbins, avoiding decrease of genetic variation and the potential harms inflicted on donor colonies through fragmentation. This novel technique was performed on *S. pistillata* larvae, adding new facets to the research as most previous efforts had been devoted to planulae of broadcasters (Harii et al., 2001; Okamoto et al., 2005; Omori, 2005).

In the established gardening technique (Epstein et al., 2001), fragments of corals are grown on plastic pins, which are used for transplantation. Shafir et al. (2006) calculated the time required to create stocks of 10,000 colonies per species, from five species, through fragmentation using unskilled personnel. In congruence with this idea, we calculated the time needed to produce an equal stock of corals on the same type of plastic pin, using planulae as source material. The resulting stock of colonies can be used as needed in the second step of the "coral gardening" protocol (Rinkevich, 2005, 2006).

2. Materials and methods

The study was conducted in front of the Inter University Institute for Marine Science (IUI) in Eilat, Israel (northern Red Sea). Planulae were collected *in situ* from 15 gravid *S. pistillata* colonies, ranging between 11.5 and 29.8 cm in diameter, residing at a depth of 3–5 m. All planulae were collected at night using simple planulae traps, as described in Amar and Rinkevich (2007).

As settlement apparati, we used aseptic disposable Petri dishes (90 × 15 mm) that were covered with preconditioned polyester papers, double-sided matte (Mailer's paper; manufactured by Jolybar, Israel), cut to fit the top (9 cm diameter) and bottom (8.5 cm diameter) of the Petri dishes. Preconditioning was performed by submerging the Mailer's paper disks in a flow through seawater table for at least 2 months, as according to Petersen et al. (2005c), during which natural biofilm developed. After biofilm development, the papers were glued to the top (lid) and the bottom of the Petri dishes. When put together, the Petri dishes created a closed vessel in which planulae could settle on the top and the bottom.

We inserted 1–69 sister planulae (same day cohort, released from a single mother colony) per dish, depending on collection yields. Most of the Petri dishes were initially stocked with 60 planulae. Three apparatus prototypes (treatments) were established (Fig. 1). The first (A) was a Petri dish without a lid, which was placed in a humidity chamber, a system similar to that used previously (Amar et al., 2007) to settle planulae. The second and third treatments (B and C) tested settlement in seawater-filled Petri dishes with lids. In addition, the third prototype (C) was fitted with silicon plugs, perforated for air to escape. The two closed apparati (B and C) were placed in a flow through seawater table for stable ambient temperature and kept submerged, tightly closed by placing a weight on top of the lid. All air was removed from the submerged Petri dishes, either via the opening between dish and lid (treatment B) or through the silicone plugs (treatment C), to allow the planulae to settle on the top lid, which would otherwise be obstructed by air. We counted larval settlements in the first 4 days after their release, a period consisting of two 48-h periods. The Mailer's paper disks carrying recruited spats were removed after the first period and replaced with new pre-treated paper disks. Then all free-swimming planulae were returned to the same Petri dish for an additional 48-h period. Leaving the planulae in stagnant water for periods of 3 days or longer resulted in increased mortality rates (personal observation).

Where possible, the planulae of a single mother colony were distributed evenly over treatments and observed simultaneously in the three treatments. In total, 162 Petri dishes were observed. For the first settlement, 89 Petri dishes (A = 29, B = 30, and C = 30) were used; for the second settlement, 73 Petri dishes (A = 24, B = 24, and C = 25) were required. As mentioned, in treatments B and C, each Petri dish was fitted with two Mailer's paper disks (top and bottom), whereas treatment A used only one (bottom). The settlement rate in our apparati was not influenced by the initial number of planulae or available settlement area (Amar et al., 2007). In total, 271 Mailer paper disks with coral spats were produced. The first settlement period yielded 149 and the second 122 settled Mailer's paper disks. We calculated larval mortalities during the 96-h period as total planulae at day zero, minus the sum of settled and free swimming larvae.

A "flypaper" system (Morse et al., 1994) was adopted for handling Mailer's papers with settled planulae. First, adhesive (Super Glue 3, Loctite, Ireland) was applied to scratched parts of a glass slide (7.5 × 5 cm) on which an unconditioned square of Mailer's paper was then glued. This intermediate substrate was used because previous attempts at gluing paper disks with attached spats directly onto the glass slides failed to hold permanently (personal observation), probably because of the developed biofilm. The Mailer's paper disks with settled planulae were then glued onto the clean paper squares (Fig. 2a).

Sets of four glass slides were placed vertically in a Polypropylene staining rack (7 × 9 cm) and returned to the flow through seawater table. Using only four of the 20 slots available in the staining rack

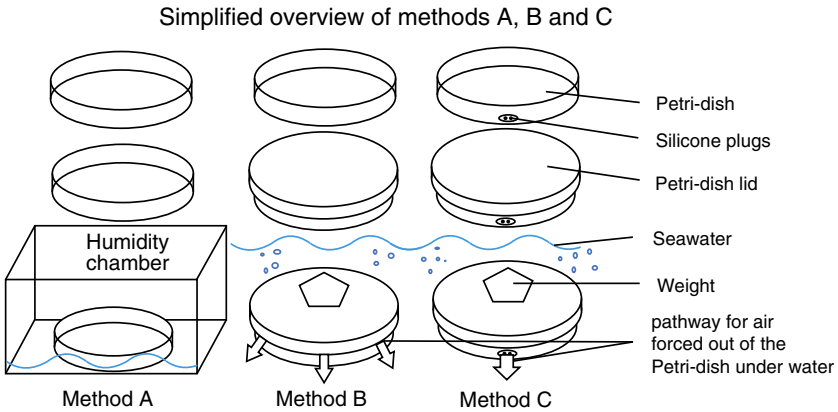

Fig. 1. A simplified outline of treatments A, B and C. In the first step, each Petri dish is stocks with ~60 planulae. The second step shows Petri dishes for treatments B and C covered by their lids. The third step is the placement of the three treatments in respective environments; A is in a humidity chamber, B and C are submerged in a flow through seawater table.

allowed free water flow, easy access for small herbivores that graze on algal assemblages, and reduced particle accumulation (Fig. 3). Randomly selected Mailer disks ($n=42$) were used to calculate survival after a month by comparing photographs of the Mailer's paper disks at $t=0$ and $t=1$ month.

After 1 month in the flow through seawater table, the surviving settlements were easily detached from the papers, "transglued" (Super Glue 3, Loctite, Ireland) onto plastic pins (Red-Sea Corals LTD., Israel.; Shafir et al., 2006) and then moved from the *ex situ* conditions to the our mid-water coral nursery located *in situ* at the North Beach area of Eilat (29°32.4′N, 34°58.40′E). In the nursery the trays (45 × 32 cm) were fitted with plastic net covers of 1 cm^2 mesh size (Fig. 2b). The trays were made of PVC pipes forming a frame and black plastic net with 0.5 cm^2 mesh size covering the frame. Holes were drilled into the PVC pipe to allow air to escape, and the mesh was kept in place by cable ties (KSS nylon cable ties 203 × 2.5 mm, Kai Suh Suh Enterprise Co., Ltd., Taiwan). We used the term "transgluing" in order to avoid confusion between coral transplantation onto reefs and spats' translocation to other substrates.

The transfer of the colonies from the laboratory to the nursery was done by boat, and, during transportation, prepared trays carrying pins with colonies were submerged in seawater-filled containers. Using SCUBA, we took the trays from the boat to the nursery and attached to the nursery using two cable ties, at opposite points. Each tray was covered by plastic covers of 1 cm^2 mesh size (Fig. 2b), attached to the tray on one side with a plastic cable tie and, on the opposite side, with a wire that could be released when needed, for easy access.

The trays with settled young corals were monitored *in situ* for 4 months. Routine maintenance was performed once a month by SCUBA, including the removal of covering nets and clearing away algal assemblages and major encrusting invertebrates (tunicates and other sessile filter feeders) by brushing the trays and nets, using gloves and tweezers for fine work. Sea urchins (*Diadema setosum*) and other herbivorous invertebrates that had settled on the trays were not removed. Each tray was photographed on a monthly basis to assess growth and mortality rates. Maintenance of *in situ* farmed colonies was identical with farmed nubbins (Shafir et al., 2006).

We analyzed the treatments for significant differences in settlement rates, orientation, and survival. For these analyses, we used one-way ANOVA and Tukey's Honestly Significant Difference (HDS) tests available in SPSS 16.0. Photo analysis for survival *ex situ* was done using an Olympus Stylus 720 SW on self-timer suspended above the Mailer's paper on a laboratory stand using Macro option at highest resolution of 7.1 megapixels availability. By setting up a laboratory stand with camera, the high-resolution and self-timer yielded sharp pictures, allowing settlements of any age be easily spotted. *In situ* photographs were done with Sony Cybershot DSC-W7 7.1 megapixel. Mortality (through lack of growth a 4-month period or detachment) was determined using freeware UTHSCSA Image Tool, Version 3.0.

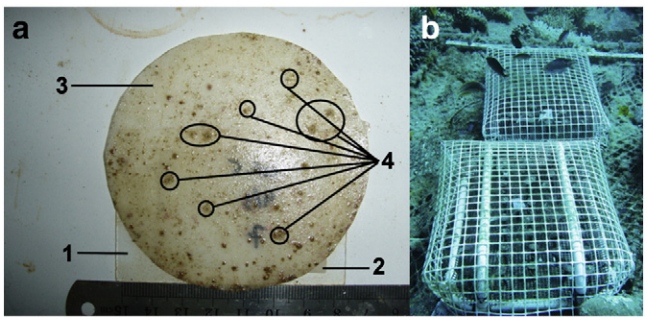

Fig. 2. *Ex situ* and *in situ* components of the spat stocking protocols. (a) *In situ* planulae settlement apparatus. 1, Glass slide; 2, square Mailer's paper; 3, circular Mailer's paper; and 4, *Stylophora pistillata* spats. (b) Two trays covered with 1 cm^2 plastic nets in the Coral Nursery, Eilat, Israel, at a depth of 9 m.

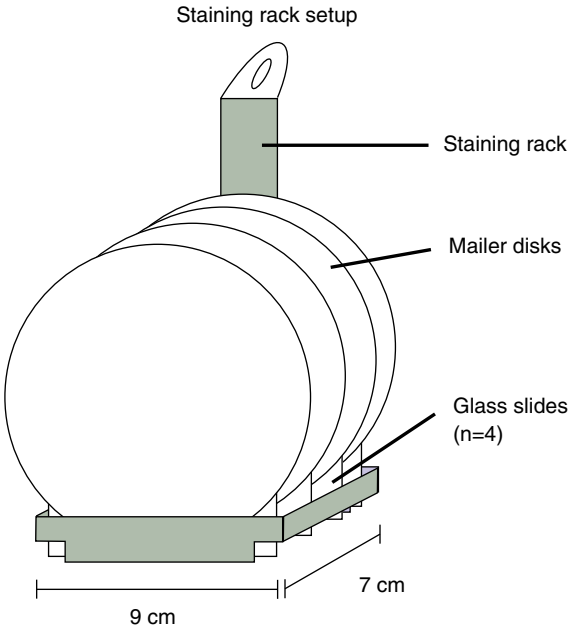

Fig. 3. The placement of glass slides in a staining rack. A maximum of four glass slides per staining rack. The glass slides are evenly spaced, leaving space between for water flow through and access for grazing by small herbivores.

3. Results

We collected 1236, 1307, and 1278 planulae for the A, B, and C treatments, respectively, from the 15 coral genotypes. Seven genotypes, which released over 86% of all planulae collected, shed >180 planulae per colony. Yields of ≥180 planulae/coral were subjected to all three treatments and observed simultaneously.

In the A treatment 45.4 ± 21.9%SD ($n = 510$) of the planulae settled. Settlement rates of B and C treatments (63.2 ± 24.7% SD, $n = 828$ and 60.0 ± 22.2%S D, $n = 747$ spat, respectively) did not differ significantly from each other but were higher ($p < 0.05$; Tukey's HSD) than A treatment outcomes (Table 1). In the first 48-h period, most planulae settled on the Mailer's disks placed in the lids (Petri dish tops) of B and C treatments ($p < 0.05$; one-way ANOVA). During the second 48-h period, most planulae settled at the bottom of the Mailer's papers ($p < 0.05$; one-way ANOVA; Fig. 4). Of the 2082 recorded settlements, only 97 (4.7%; discarded from follow-up experiment) settled on the side of the Petri dishes where no Mailer paper was present, the majority ($n = 67$) of which were recorded in the A treatment. None of the settlements recorded were found underneath the paper surface, between the Petri dish surface and the Mailer's paper. Randomly chosen Mailer's disks ($n = 42$ Mailer disks, with $n = 229$ coral spats) were further monitored *ex situ* for 1 month. During the first month in the flow through seawater table, 80.8% of the spats survived ($n = 185$ coral spats).

In the first 48 h, 47.2–49.6% of *S. pistillata* planulae settled in the B and C treatments, as compared to 34.5% in treatment A. The second settlement cycle increased total settlements by 10.9–13.5%, demonstrating that the competence of the planulae to settle decreases beyond the first 48-h period (Table 1). Four days post-release, 16.3–23.1% of the initial numbers of planulae were still in free swimming phase.

The difference in settlement rates could not be explained by the initial number of planulae (1236, 1307, and 1278) used per treatment (A = 29, B = 30, and C = 30 Petri dishes, respectively; $p = 0.722$; Tukey's HSD). Similarly, mortality or loss of planulae could not attributed to any of the treatment ($p = 0.810$; Tukey's HSD; Table 1). It could not be discerned if planulae settlement rates were affected by the number of planulae per Petri dish (1 to 69 planulae), because group sizes were too small and distributed unevenly to allow proper statistical analysis.

At the age of 1–2 months, 480 spats were easily peeled off the Mailer's papers, by bending the papers. Spats were individually transglued to plastic pins previously used for attaching coral nubbins and fragments (Shafir et al., 2006). The colonies were then placed *in situ* within the floating coral nursery near Eilat, covered with a 1 cm^2 white plastic net to protect against fish predation and accidental detachment. After 4 months *in situ*, 89% of the colonies ($n = 428$) were alive, starting to form 3D structures (Fig. 5).

Settling and retrieving planulae traps took 10 min per colony, harvesting, on average, about 100 planulae/night/coral colony during the peak of the reproductive season (personal observation). Setting Petri dish, including preparation and gluing of the Mailer's papers, took 5 min per dish. Transferring planulae from the trap to the Petri dishes took 10 min per 60 planulae. An additional 10 min per Petri dish was required for replacing the Mailer's papers (for the second settlement period) and for transferring the settled Mailer's papers onto glass slides. Transgluing each 1-month-old colony onto a plastic pin took approximately 2 min per colony.

Spat stocking for 10,000 5-month-old *S. pistillata* colonies in the Gulf of Eilat (taking into account losses incurred by planulae mortality, larval incompetence, and *ex situ* and *in situ* spat mortalities) necessitates the collection of 23,000 planulae by inserting of 230 traps and 40 person-hours during the peak of the reproductive season. Assuming an average 60% settlement rates, 130 person-hours was required for the first and second settlement periods (97 and 33 person-hours, respectively, assuming 60 planulae per Petri dish

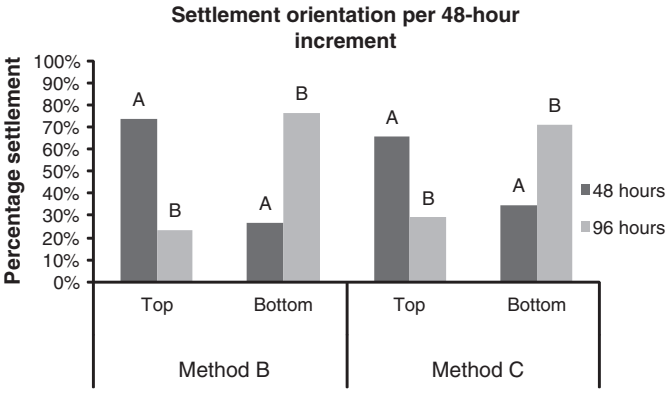

Fig. 4. *S. pistillata* larval settlement preference, along two 48-h periods after their release. *S. pistillata* showed a significant preference ($p < 0.05$, one-way ANOVA for both method B and C) for the top and bottom mailer paper during the first 48-h period (A) and second 48-h period (B), respectively.

Table 1
Settlement rates and mortality of *Stylophora pistillata* planulae in treatments -A-, -B- and -C-. First and second indicate the results for the first and second 48-h settlement periods after release, respectively. *Indicates a significant difference between treatments, Tukey's (HDS) $p < 0.05$. Settlement and mortality of different methods.

Treatment/Period	Planulae (N)	Settlement rates (%) ± SD	Mortality (%) ± SD
A, 1st	1236	35 ± 23	18 ± 16
B, 1st	1307	50 ± 29*	15 ± 22
C,1st	1278	47 ± 25*	15 ± 20
A, 2nd	523	22 ± 20	16 ± 23
B, 2nd	474	31 ± 28	13 ± 15
C, 2nd	489	29 ± 25	18 ± 23
A, total	1236	45 ± 22	27 ± 23
B, total	1307	63 ± 25*	19 ± 23
C, total	1278	60 ± 22*	23 ± 21

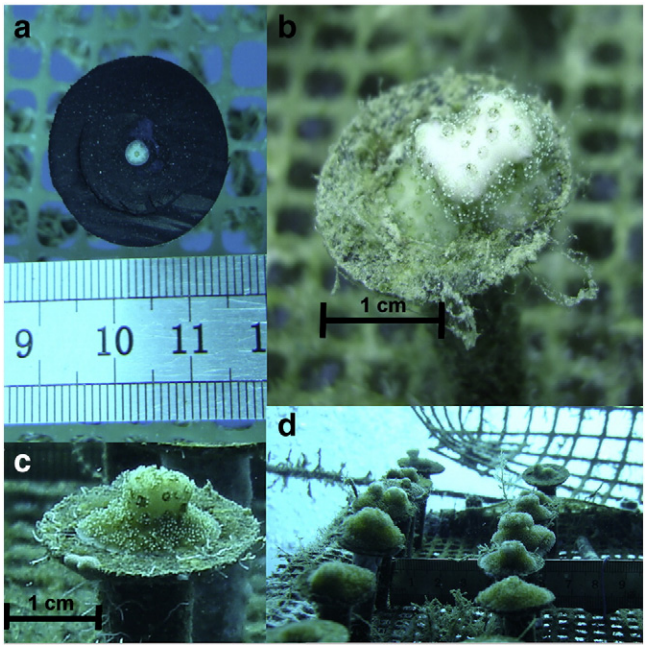

Fig. 5. Young *Stylophora pistillata*: colonies on a plastic pin. (a) A 1-month-old colony on a plastic pin *in situ* immediately after having been brought to the nursery via SCUBA. (b and c) Colonies at age of 5 months, farmed for 4 months *in situ* in the coral nursery. (d) Five-month-old colonies farmed in the coral nursery on pins inserted into a tray. All pins are uniform in size.

during both settlement periods), creating a total of approximately 14,000 spats. With 80% survival rates, about 11,200 coral spats were transglued onto plastic pins (an additional 370 person-hours). It took 40 diving-hours to place trays with coral spats on pins in the nursery (50 corals per tray, 240 trays). Following the 90% survival for the first 4 months *in situ*, 10,000 small coral colonies remained alive after 5 months. Maintenance of nursery-farmed corals required 24 diving-hours per month.

In total, 676 person-hours (4 person months) was needed to produce 10,000 small, 5-month-old colonies (size of each is equal size to a small branch fragment) in Eilat's nursery. This time investment is comparable to other methodologies used for different types of coral material, but with better results (Table 2). Preparing and growing 10,000 fragments require between 317 and 547 person-hours (Shafir et al., 2006); rearing and growing 10,000 sexually produced coral spats derived from broadcasting species requires between 968–1210 person-hours (Omori, personal communication). Different coral species or environmental conditions can influence these numbers.

4. Discussion

In view of the worldwide decline of coral reefs and the failure of currently used management methods (Sale, 2008) to reach their set goals, we must continue to work towards improving the tools and methods for reef rehabilitation. By applying "active" restoration methods to the already existing management measures, we may be able to restore otherwise denuded reefs or encouraging reefs towards natural recovery. This study enhances "active" restoration methodologies by using sexually produced new coral colonies that can be exploited as reefs' eco-engineers or as boosters in corals' genetic variation and reef resilience. We offer two apparati (treatments B and C) that are more efficient than the previously used apparatus (treatment A) for settling planulae of brooding coral species. This settlement efficiency stems from the inclination of *S. pistillata* planulae to settle top substrates in the first 48 h, a preference that is absent from treatment A. The settlement rate in treatment A was comparable to results of a previous study (27.1–36.1% within 14 days; Amar et al., 2007) performed on *S. pistillata* larvae released from the same site population.

The B and C treatments are highly efficient in establishing coral spat stocking (about 40% of released *S. pistillata* larvae reached the stage of 5-month-old small colony) following a short settlement period (96 h). Most larvae settled on the provided substrate (>95%), and only a minority settled on the Petri dishes' side. Planulae mortality was low in all treatments (21–23%). Therefore, the flexible Mailer's paper serves all needs, allowing high settlement rates with minimal pre-treatment procedures and high survival rates of settled larvae. It is a recyclable substrate from which spat can be easily detached undamaged and "transglued" to any other permanent substrate of choice.

Another benefit of the spat stocking methodology is the reduction of chimerism (fusion between different spats of the same species) and competition to which coral spats are exposed after collective settlement. Chimerism is a common outcome in spat aggregates and reduces the number of available individuals (Amar et al., 2008). Competition (rejection, overgrowth, etc.; Amar et al., 2008; Amar and Rinkevich, 2010) between young settled conspecifics may cause another problem. Planulae that settled and metamorphosed on "permanent" substrates, such as the "coral pegs" (62.5 settlements per peg; Omori and Iwao, 2009) start competing for space shortly after settlement, which results in only 1–2 surviving colonies/peg and increased loss of valuable material. This outcome is also evident in other cases of settlements on permanent substrates, e.g., Petersen's pyramid and flat tiles (Petersen et al., 2005b), Nozawa's micro-crevice tiles (Nozawa, 2008), and Okamoto and Nojima's coral settlement device (CSD; Okamoto et al., 2005). Moreover, larval settlements within substrate crevices, commonly recorded in all former methodologies, offer limited prospects for successful transfer to other substrates because of damages inflicted during their detachment. An inherent characteristic of our new spat stocking tool for *S. pistillata* is its simplicity. Past studies (Morse et al., 1994, 1996; Heyward and Negri, 1999; Iwao et al., 2002) suggested using specific chemical cues for improving planulae settlement rates, which can be achieved by the simple pre-conditioning protocol of the Mailer's papers. The same applies to the recommendation for rough-textured substrates because larvae not only prefer to settle within crevices but also show increased *in situ* survival rates as compared to flattened substrates (Omori, 2004; Okamoto et al., 2005; Nozawa, 2008).

In our new system, the application of a short (one month) *ex situ* farming protocol prior to transferring the spat to nursery conditions yields not only high survivorship (89% in 4-month period) and fast growth rates (enhanced rates as compared to *ex situ* conditions; unpublished) but also reduced maintenance efforts. This high survivorship is similar to the survivor values of *S. pistillata* nubbins under nursery conditions (65.8–82.0%, 100d *in situ*; Shafir et al., 2006). In addition, the short *ex situ* period is inexpensive and easy to operate. A density of approximately 800 spats/m^2 table surface area is obtainable by using staining racks, each containing four glass slides covered with Mailer's papers. This high-density does not reduce survival (80% within the first month after settlement), and preliminary results revealed that the 1-month *ex situ* period could be curtailed. Young *S. pistillata* colonies develop wide basal plates almost immediately after settling, making the spat easily removable as early as two weeks post-settlement (personal observation).

Transgluing each 1-month-old colony onto a plastic pin takes approximately 2 min, similar to gluing an *Acropora* nubbin. Shafir et al. (2006) calculated 191 to 415 person-hours, depending on the coral species used and level of skill, to create 10,000 plastic pins carrying coral fragments and 120 person-hours for 5-month maintenance period. In Palau, Omori and Kimura (personal communication) calculated 768 to 1010 person-hours for establishing 8000–10,000 coral spats (broadcasting species), and 200 more person-hours (maintenance) for 5-month-old spat. These spats are subject to further intraspecific competition because they cannot be spaced.

We estimate about 676 person-hours for 10,000 5-month-old sexually produced coral colonies. It should be noted that maintenance

Table 2
Overview of time required to develop a stock number of 10,000 new colonies at age of 5 months. *Brooders, **Fragments, ***Spawners. Comparison of stock creation and time requierement.

		This study*	Shafir et al. (2006)**	Omori*** (personal communication)
Preliminary step	Collection of eggs/larvae	40 h	N.A.	19 h
	Settlement	130 h	N.A.	119 h
	Predicting spawning	N.A.	N.A.	20 h
First step	Preparing corals for nursery/transgluing	370 h	100–200 h	24 h
	Placing of corals in nursery	40 h	40 h	30 h
	Maintenance per month	24 h	24 h	12,5 h
	# Colonies at the age of 5 months	10,000	6580–8200	2000–2500
	Total time needed/10,000	676 h	317–547 h	968–1210 h

of the mid-water floating nursery and farmed coral colonies could differ greatly per location and seasonality, e.g., algal blooms require more time cleaning. Although our procedure for creating 10,000 5-month-old corals is more time-consuming than Shafir et al. (2006) method with asexually produced coral colonies and requires more skill to perform, each of the resulting corals is genetically unique, thus preserving local genetic variance, and no corals are damaged in the process of creation. Furthermore, creating a stock of 10,000 asexual produced corals necessitate fragmentation of 10 to 50 corals (212–1054 ramets per coral; Shafir et al., 2006), which makes our method particularly attractive for endangered or threatened species.

Therefore, the above results refute the general assumption that sexually produced material, while being an invaluable tool for active reef restoration, is difficult to use in large restoration projects because it is time-consuming and costly to grow coral colonies from the larval stage. Whereas we successfully used a model brooder, hermaphroditic species (Harrison and Wallace, 1990), the applicability of the novel methodology on other brooder species has yet to be demonstrated. Additionally, populations of *S. pistillata* in the Gulf of Eilat are particularly robust compared to *S. pistillata* in other reef areas (Marshall and Baird, 2000; McClanahan et al., 2004). We would suggest that, together with farming of fragments and nubbins, it is possible to farm large quantities of sexually produced *S. pistillata*, for restocking genetic variation of local populations within a short period.

We here present part of the first step of a methodology for active restoration with sexually produced corals. As 5-month-old small colonies as grown in this study are too small for transplantation, they should be kept in the nursery until they reach sexual maturity, about 3 years in the field and much less under nursery conditions (Amar and Rinkevich, 2007). Rearing young coral spats in mid-water nurseries to large colony sizes, however, has yet to be studied thoroughly.

Acknowledgments

This study was supported by the INCO-DEV project (REEFRES, no. 510657), CORALZOO, an EC Collective Research project (no. 012547), the AID-CDR program (no C23-004) and by a grant from the Israeli Ministry of Infrastructure and by the partnership of NAF-IOLR with JNF-USA. The research fulfils part of the requirements for the doctoral degree by B. Linden at the University of Amsterdam (UvA), the Netherlands. We thank R.P.M. Bak, K.O. Amar, G.J.J. Linden, A. Linden van Ruiten, A. Lazarus, O. Polak, D. Gada, G. Paz, and our reviewers for their invaluable advice, support, and assistance. **[ST]**

References

Amar, K.O., Rinkevich, B., 2007. A floating mid-water coral nursery as larval dispersion hub: testing an idea. Mar. Biol. 151, 713–718.

Amar, K.O., Rinkevich, B., 2010. Mounting of erratic histoincompatible responses in hermatypic corals: a multi-years interval comparison. J. Exp. Biol. 213, 53540.

Amar, K.O., Chadwick, N.E., Rinkevich, B., 2007. Coral planulae as dispersion vehicles: biological properties of larvae released early and late in the season. Mar. Ecol. Prog. Ser. 350, 71–78.

Amar, K.O., Chadwick, N.E., Rinkevich, B., 2008. Coral kin aggregations exhibit mixed allogeneic reactions and enhanced fitness during early ontogeny. BMC Evol. Biol. 8, 126.

Ayre, D.J., Hughes, T.P., 2004. Climate change, genotypic diversity and gene flow in reef-building corals. Ecol. Let. 7, 273–278.

Bowden-Kerby, A., 2001. Low-tech coral reef restoration methods modeled after natural fragmentation processes. Bull. Mar. Sci. 69, 915–931.

Byers, J.E., Cuddington, K., Jones, C.G., Talley, T.S., Hastings, A., Lambrinos, J.G., Crooks, J. A., Wilson, W.G., 2006. Using ecosystem engineers to restore ecological systems. Trends Ecol. Evol. 21, 493–500.

Donner, S.D., Skirving, W.J., Little, C.M., Oppenheimer, M., Hoegh-Guldberg, O., 2005. Global assessment of coral bleaching and required rates of adaptation under climate change. Global Change Biology 11, 2251–2265.

Edwards, A.J., Gomez, E.D., 2007. Reef restoration concepts and guidelines: making sensible management choices in the face of uncertainty. Coral Reef Targeted Research & Capacity Building for Management Programme The University of Queensland, St Lucia QLD 4072 Australia, p. 38 (www.gefcoral.org).

Epstein, N., Bak, R.P.M., Rinkevich, B., 2001. Strategies for gardening denuded coral reef areas: the applicability of using different types of coral material for reef restoration. Restor. Ecol. 9, 432–442.

Epstein, N., Bak, R.P.M., Rinkevich, B., 2003. Applying forest restoration principles to coral reef rehabilitation. Aquat. Conserv. Mar. Freshw. Ecosyst. 13, 387–395.

Fabricius, K.E., Metzner, J., 2004. Scleractinian walls of mouths: predation on coral larvae by corals. Coral Reefs 23, 245–248.

Guest, J.R., Dizon, R.M., Edwards, A.J., Franco, C., Gomez, E.D., 2009. How quickly do fragments of coral "self-attach" after transplantation? Restor. Ecol. 17, 3.

Harii, S., Omori, M., Yamakawa, H., Koike, Y., 2001. Sexual reproduction and larval settlement of the zooxanthellate coral *Alveopora japonica* Eguchi at high latitudes. Coral Reefs 20, 19–23.

Harrison, P., Wallace, C., 1990. Reproduction, dispersal and recruitment of scleractinian corals. In: Dubinsky, Z. (Ed.), Coral reef ecosystems. Elsevier, Amsterdam, pp. 133–207.

Heyward, A.J., Negri, A.P., 1999. Natural inducers for coral larval metamorphosis. Coral Reefs 18, 273–279.

Hoegh-Guldberg, O., Mumby, P.J., Hooten, A.J., Steneck, R.S., Greenfield, P., Gomez, E., Harvell, C.D., Sale, P.F., Edwards, A.J., Caldeira, K., Knowlton, N., Eakin, C.M., Iglesias-Prieto, R., Muthiga, N., Bradbury, R.H., Dubi, A., Hatziolos, M.E., 2007. Coral reefs under rapid climate change and ocean acidification. Science 318, 1737–1742.

Hughes, T.P., Baird, A.H., Bellwood, D.R., Card, M., Connolly, S.R., Folke, C., Grosberg, R., Hoegh-Guldberg, O., Jackson, J.B.C., Kleypas, J., Lough, J.M., Marshall, P., Nystrom, M., Palumbi, S.R., Pandolfi, J.M., Rosen, B., Roughgarden, J., 2003. Climate change, human impacts, and the resilience of coral reefs. Science 301, 929–933.

Iwao, K., Fujisawa, T., Hatta, M., 2002. A cnidarian neuropeptide of the GLWamide family induces metamorphosis of reef-building corals in the genus *Acropora*. Coral Reefs 21, 127–129.

Jackson, S.T., Hobbs, R.J., 2009. Ecological restoration in the light of ecological history. Science 325, 567–569.

Keough, M.J., Downes, B.J., 1982. Recruitment of marine invertebrates: the role of active larval choices and early mortality. Oecologia 54, 348–352.

Levy, G., Shaish, L., Haim, A., Rinkevich, B., 2010. Mid-water rope nursery-Testing design and performance of a novel reef restoration instrument. Ecol. Eng. 36, 560–569.

Lindahl, U., 2003. Coral reef rehabilitation through transplantation of staghorn corals: effects of artificial stabilization and mechanical damages. Coral Reefs 22, 217–223.

Marshall, P.A., Baird, A.H., 2000. Bleaching of corals on the Great Barrier Reef: differential susceptibilities among taxa. Coral Reefs 19, 155–163.

Mbije, N.E.J., Spanier, E., Rinkevich, B., 2010. Testing the first phase of the 'gardening concept' as an applicable tool in restoring denuded reefs in Tanzania. Ecol. Eng. 36, 713–721.

McClanahan, T.R., Baird, A.H., Marshall, P.A., Toscano, M.A., 2004. Comparing bleaching and mortality responses of hard corals between southern Kenya and the Great Barrier Reef, Australia. Mar. Pollut. Bull. 48, 327–335.

Mora, C., Andrefouet, S., Costello, M.J., Kranenburg, C., Rollo, A., Veron, J., Gaston, K.J., Myers, R.A., 2006. Ecology: Coral reefs and the global network of marine protected areas. Science 312, 1750–1751.

Morse, D.E., Morse, A.N.C., Raimondi, P.T., Hooker, N., 1994. Morphogen-based chemical flypaper for *Agaricia humilis* coral larvae. Biol. Bull. 186, 172–181.

Morse, A.N.C., Iwao, K., Baba, M., Shimoike, K., Hayashibara, T., Omori, M., 1996. An ancient chemosensory mechanism brings new life to coral reefs. Biol. Bull. 191, 149–154.

Nagelkerken, I., Bouma, S., van den Akker, S., Bak, R.P.M., 2000. Growth and survival of unattached *Madracis mirabilis* fragments transplanted to different reef sites, and the implication for reef rehabilitation. Bull. Mar. Sci. 66, 497–505.

Nozawa, Y., 2008. Micro-crevice structure enhances coral spat survivorship. J. Exp. Mar. Biol. Ecol. 367, 127–130.

Okamoto, M., Nojima, S., Furushima, Y., Phoel, C.W., 2005. A basic experiment of coral culture using sexual reproduction in the open sea. Fish. Sci. 71, 263–270.

Okamoto, M., Nojima, S., Fujiwara, S., Furushima, Y., 2008. Development of ceramic settlement devices for coral reef restoration using *in situ* sexual reproduction of corals. Fish. Sci. 74, 1245–1253.

Omori, M., 2004. Manual for Restoration and Remediation of Coral Reefs. Nature Conservation Bureau, Ministry of the Environment, Japan, p. 84.

Omori, M., 2005. Success of mass culture of *Acropora* corals from egg to colony in open water. Coral Reefs 24, 563-563.

Omori, M., Iwao, K., 2009. A novel substrate (the "coral peg") for deploying sexually propagated corals for reef restoration. Galaxea 11, 39-39.

Petersen, D., Laterveer, M., Schuhmacher, H., 2005a. Innovative substrate tiles to spatially control larval settlement in coral culture. Mar. Biol. 146, 937–942.

Petersen, D., Laterveer, M., Schuhmacher, H., 2005b. Spatial and temporal variation in larval settlement of reefbuilding corals in mariculture. Aquaculture 249, 11.

Petersen, D., Hatta, M., Laterveer, M., Bergen, D., 2005c. *Ex situ* transportation of coral larvae for research, conservation, and aquaculture. Coral Reefs 24, 510–513.

Putchim, L., Thongtham, N., Hewett, A., Chansang, H., 2008. Survival and growth of *Acropora* spp. in mid-water nursery and after transplantation at Phi Phi Islands, Andaman Sea, Thailand. Proc 11th Int Coral Reef Symp, pp. 19–22.

Riegl, B., Bruckner, A., Coles, S.L., Renaud, P., Dodge, R.E., 2009. Coral reefs. Ann. NY Acad. Sci. 1162, 136–186.

Rinkevich, B., 2005. Conservation of coral reefs through active restoration measures: recent approaches and last decade progress. Environ. Sci. Technol. 39, 4333–4342.

Rinkevich, B., 2006. The coral gardening concept and the use of underwater nurseries: lessons learned from silvics and silviculture. In: WE, P. (Ed.), Coral reef restoration handbook—the rehabilitation of an ecosystem under siege. CRC Press, Boca Raton, pp. 291–300.

Rinkevich, B., 2008. Management of coral reefs: we have gone wrong when neglecting active reef restoration. Mar. Pollut. Bull. 56, 1821–1824.

Sale, P.F., 2008. Management of coral reefs: where we have gone wrong and what we can do about it. Mar. Pollut. Bull. 56, 805–809.
Shafir, S., Rinkevich, B., 2008. The underwater siviculture approach for reef restoration: an emergent aquaculture theme. In: Schwartz, S.H. (Ed.), Aquaculture Research Trends. Nova Science Publications, New York, pp. 279–295.
Shafir, S., Van Rijn, J., Rinkevich, B., 2006. Steps in the construction of underwater coral nursery, an essential component in reef restoration acts. Mar. Biol. 149, 679–687.
Shaish, L., Levy, G., Gomez, E., Rinkevich, B., 2008. Fixed and suspended coral nurseries in the Philippines: establishing the first step in the "gardening concept" of reef restoration. J. Exp. Mar. Biol. Ecol. 358, 86–97.
Shaish, L., Levy, G., Katzir, G., Rinkevich, B., 2010. Coral reef restoration (Bolinao, the Philippines) in the face of frequent natural catastrophes. Res. Ecol. 18, 285–299.
van Oppen, M.J.H., Gates, R.D., 2006. Conservation genetics and the resilience of reef-building corals. Mol. Ecol. 15, 3863–3883.
Wilkinson, C.E., 2008. Status of coral reefs of the world: 2008. Global Coral Reef Monitoring Network and Reef and Rainforest Research Center, Townsville, Australia, p. 296.
Yap, H.T., 2004. Differential survival of coral transplants on various substrates under elevated water temperatures. Mar. Pollut. Bull. 49, 306–312.